This model is simply a recolor version of the previous Smart Cabrio with light blue color. The differences are the L shape profile on each side is now colored black. Also front window frame, seats also repaint in black. The dashboard and side door panel colored in black with yellow. Racing stripes also added, to the front hood and the back of the car. The wheel also changed. The templates is added one page for left steer version of dashboard. The scale is 1/16, the templates consist of 10 pages of patterns.

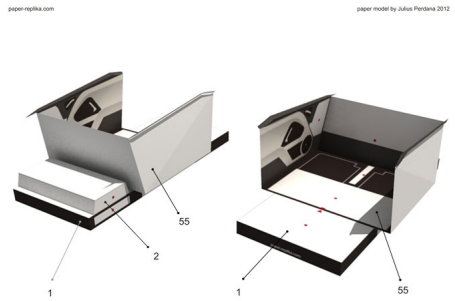

[illegible] above 2 and 55. Valley fold part 55 and place it dead center on

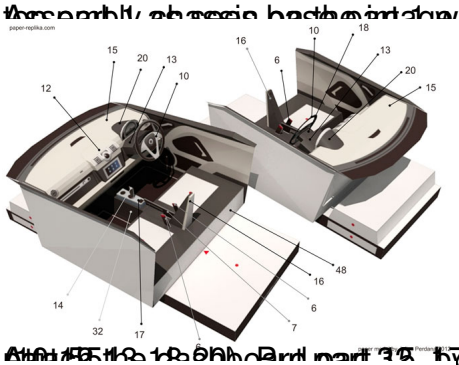

[illegible] 14. Assembly all the 48, 6, 7 and 16 then put it inside the cabin

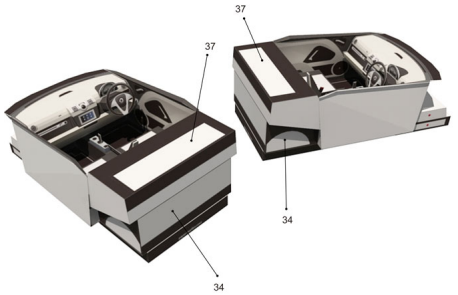

Assembly the back formers part 34 and part 37 and then put them on top back part1.

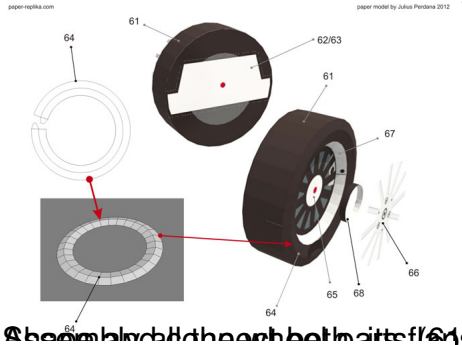

[illegible] the appearance as the image above.

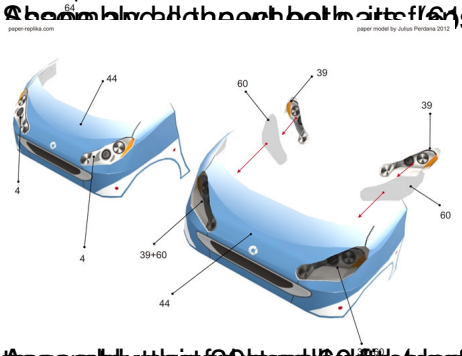

[illegible] 60.

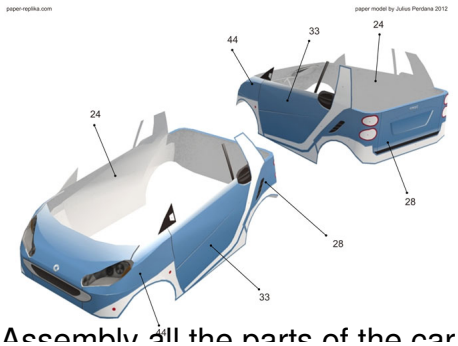

Assembly all the parts of the car body base, part 44,33,28 and 24

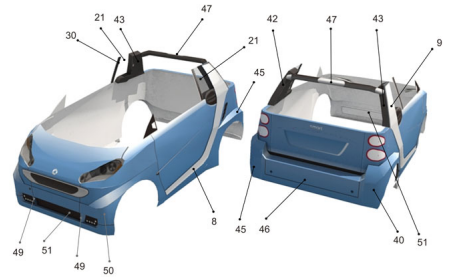

[illegible]

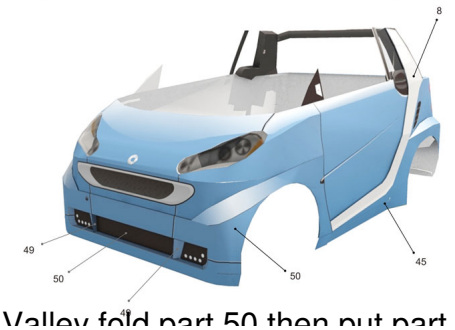

Valley fold part 50 then put part 49(s).

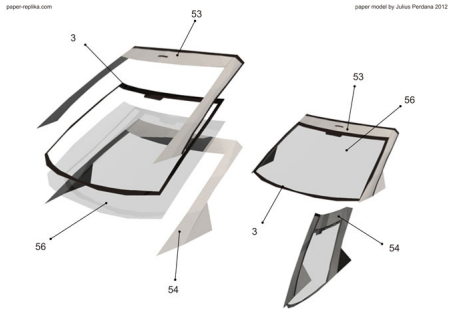

[illegible] (use transparent celluloid) first then

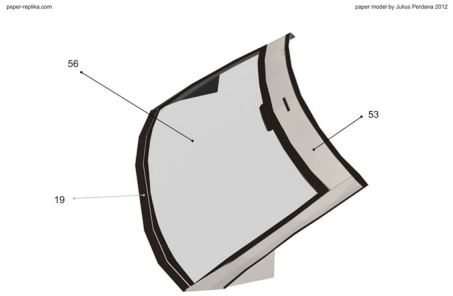

Before attaching the from window to the car body, make sure you already attach part 19.

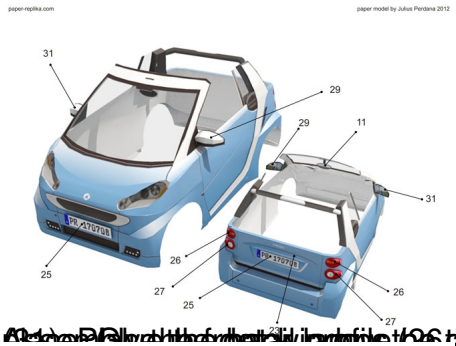

Attach the detail part (part 38) and the wipers (36). Assembly the car seats (59 and 58) and the

Assembly the chassis with the car body.

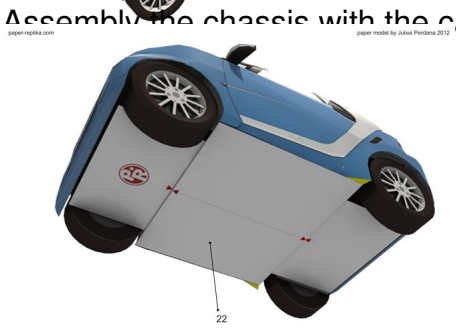

Close it with part 22 on the bottom.

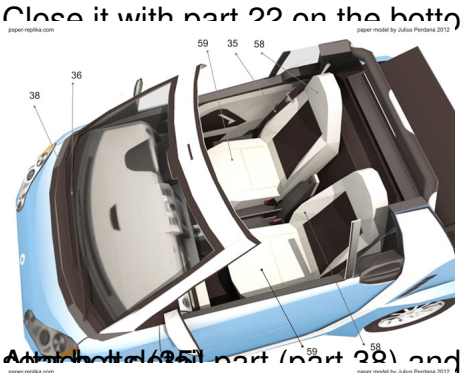

Attach a detail part (part 38) and the wipers (36). Assembly the car seats (59 and 58) and the

Attach a detail part (part 38) and the wipers (36).

[illegible] and put on top part 52 and the last [illegible] agree on the radio button

Yellow Smart Cabrio Paper Model