Written by Julius Perdana
Tuesday, 07 February 2012 03:34

For those who don't know yet, this helmet was used by Princess Leia in disguise as Boushh the bounty hunter in Star Wars - Return of The Jedi. She was on a rescue mission to freed Han Solo at Jabba's palace in Planet Tatooine. I made this helmet specially for my daughter. She always had fun around me when I am trooping in Star Wars costume, as biker scout, and she wants her own costume. This helmet also specifically designed to utilized paper or card as the final material, not like many pepakura helmet files around that intended to be processed further with resin. I have enlarge 154% from the kids size so it will fit an adult head. The templates are in A3 so I recommend to use 300 gram card, and print them at print shop with docu printing or laser print.

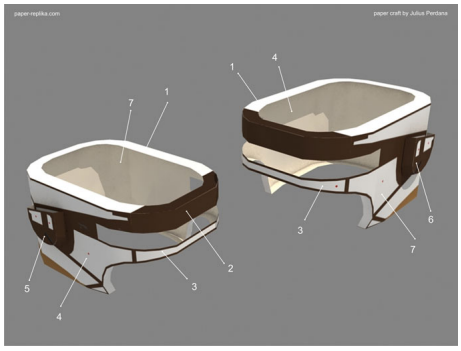

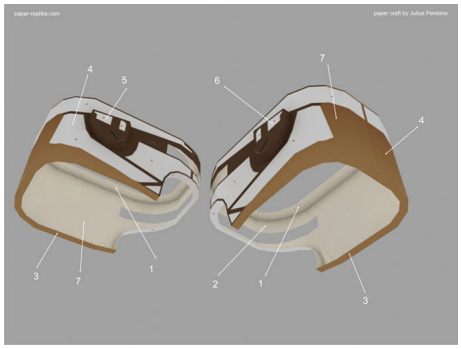

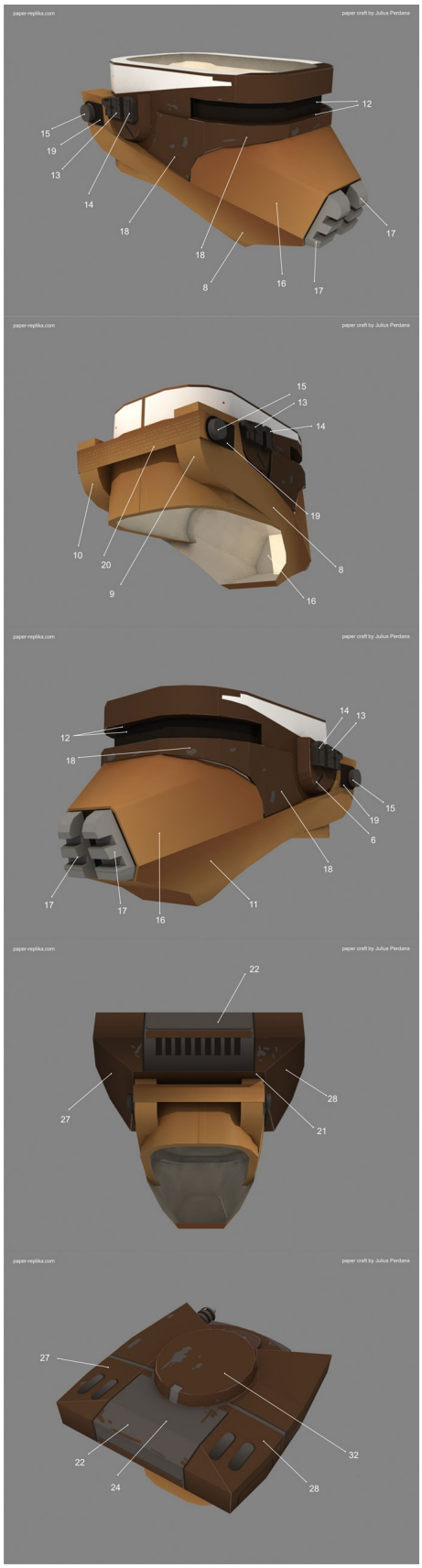
paper-replika.com
paper craft by Julius Perdana
12
15
19
13
14
18
18
8
16
17
17
paper-replika.com
paper craft by Julius Perdana
15
13
14
19
10
20
9
8
16
paper-replika.com
paper craft by Julius Perdana
14
13
12
18
15
19
6
18
17
17
16
11
paper-replika.com
paper craft by Julius Perdana
22
28
27
21
paper-replika.com
paper craft by Julius Perdana
27
32
22
24
28

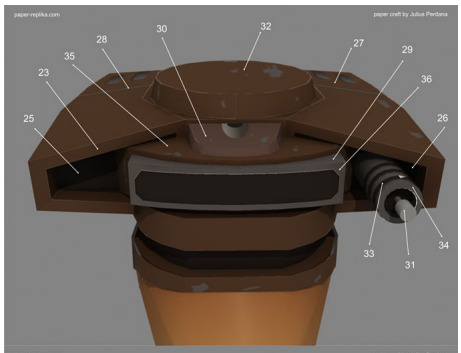

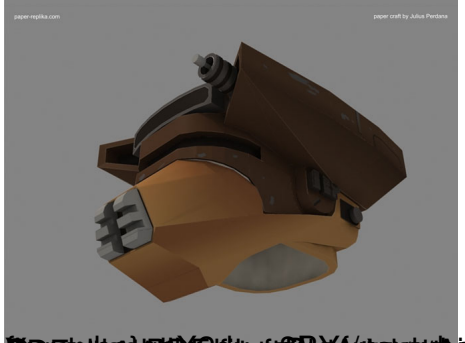

[illegible] Popular firefox to open PDO file radio button [illegible] ads.js > [illegible] Star Wars Boushh Helmet Paper Craft [illegible] paper craft.com/page/ad/showaads.js