Written by Julius Perdana
Saturday, 20 June 2009 04:41

Based on illustration made by Mamoru Ito I re-design and modified it to become papercraft. It took 3 days to modeling and I'm quite satisfied with the result. Stay tuned for more patlabor and other interesting papercraft :) (jules)

Patlabor (a portmanteau of "patrol" and "labor") refers to Mobile Police Patlabor, a manga franchise created by Headgear, a group consisting of director Mamoru Oshii, writer Kazunori Ito, mecha designer Yutaka Izubuchi, character designer Akemi Takada, and manga artist Masami Yūki. The manga received the 36th Shogakukan Manga Award for shōnen in 1991.

The popular franchise included a manga, a TV series, two OVA series, three feature length movies, and a short film compilation, named Minipato because of its super-deformed drawing style. The series has been adapted into video games and licensed products from OST to toys. Patlabor is known for using mecha - designed by Yutaka Izubuchi - not just for police or military purposes, but also for industrial and municipal jobs.

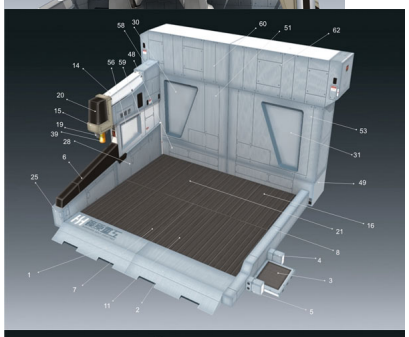

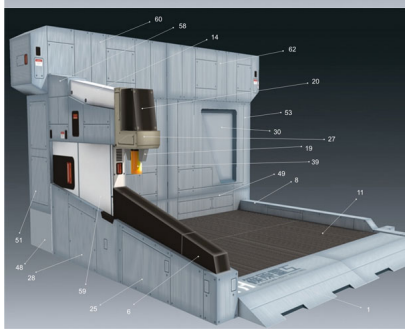

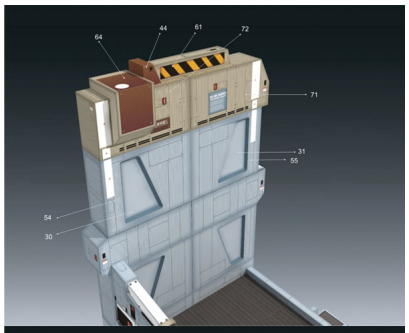
64
44
61
72
71
31
55
54
30

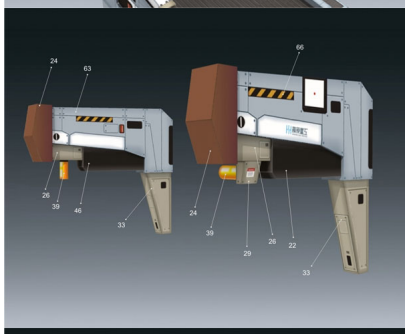
24
63
66
28
39
46
33
24
39
29
26
22
33

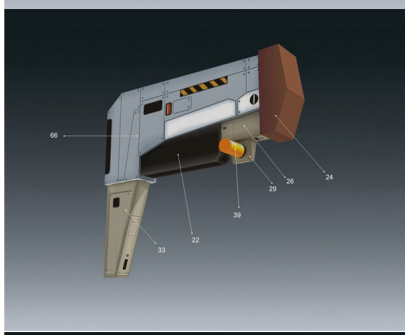
66
24
26
29
39
22
33

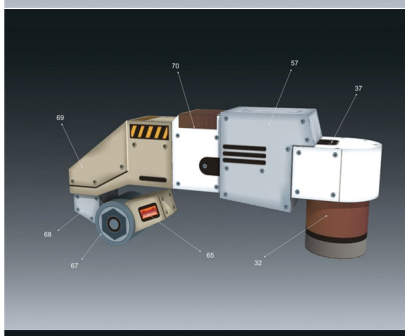
70
57
37
69
68
67
65
32

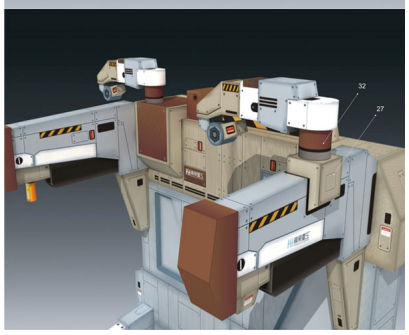
32
27

43
42
42
43
36
41
34
41
38
39
33
36
34
33
35
35

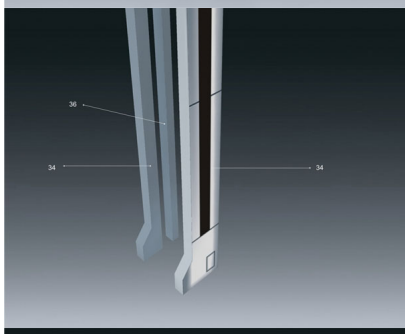
36
34
34

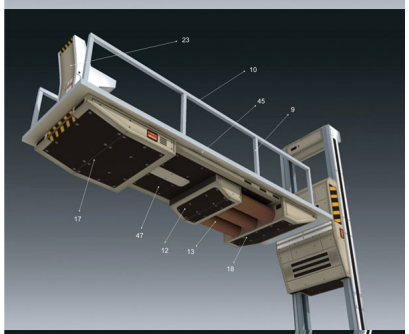
23
10
45
9
17
47
12
13
18

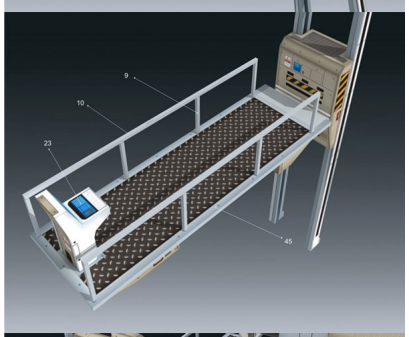
9
10
23
45

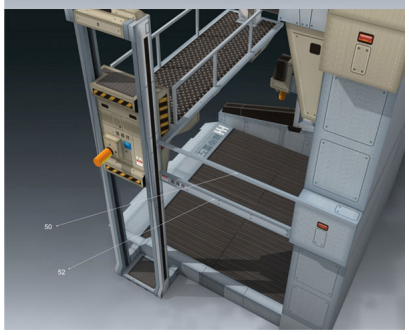
50
52

[illegible] choose agree on the radio button [illegible] show_ads.js >