This model is the first release of Boeing B-747 series in Airliner category, there will be other livery in the future, just like Airbus series. As far as I know there is no paper model of VC-25 Air Force One around in the internet in medium detail level, that is one of the reason why I created this template. This model also the first model that I made for free that is using former inside its fuselage. I use 1:144 scale, the length of the completed model will be 49 cm. I also add display stand patterns along with its former to add strength. I recommend to use 160 gsm plain paper for all parts.

ASSEMBLY INSTRUCTIONS :

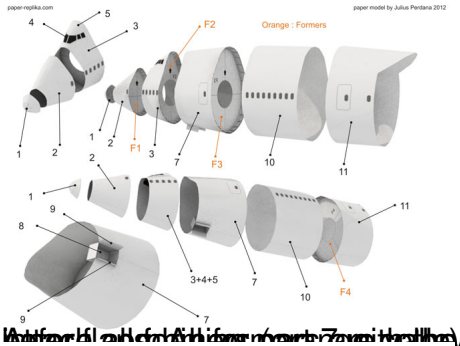

Combine all front fuselage parts using inner flaps (orange color)

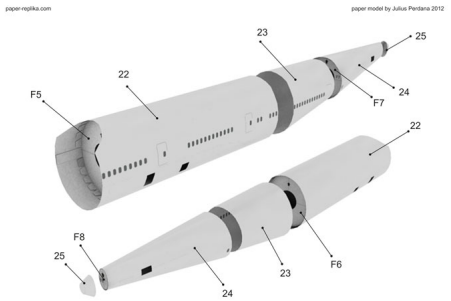

Do the same with rear fuselage parts, by using inner flaps to merge them together.

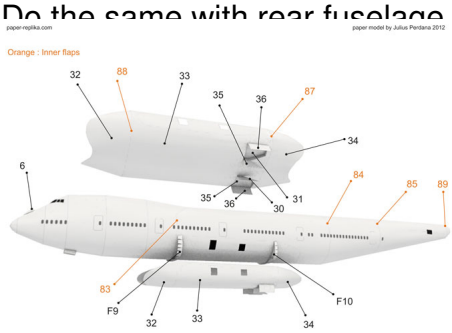

[illegible] the

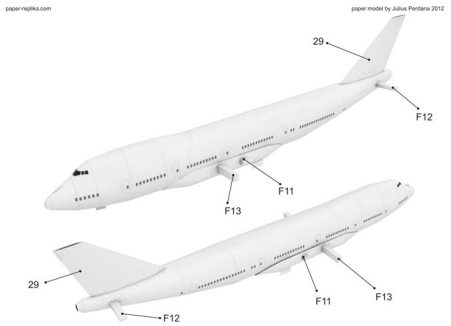

Place all wing base F11 F12 and F13 then glue them fixed.

[illegible] outer rear landing gear well.

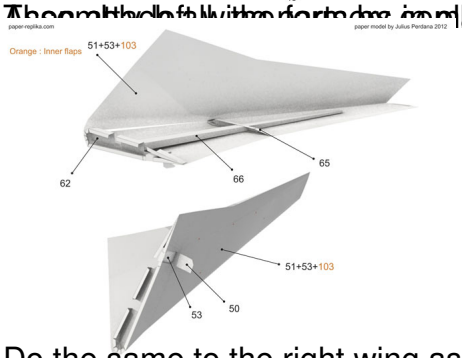

Do the same to the right wing as the left wing.

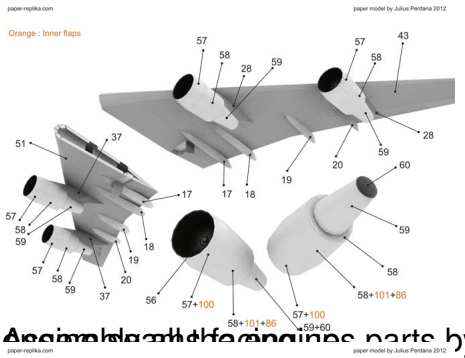

Assemble all the engines parts by using inner flaps. All engines parts have similar parts. All

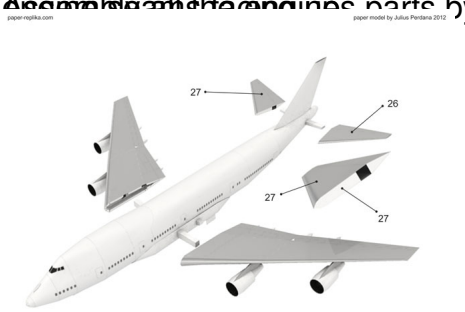

Attach the wings on to the fuselage then glue them fixed. You probably need jigs to help the

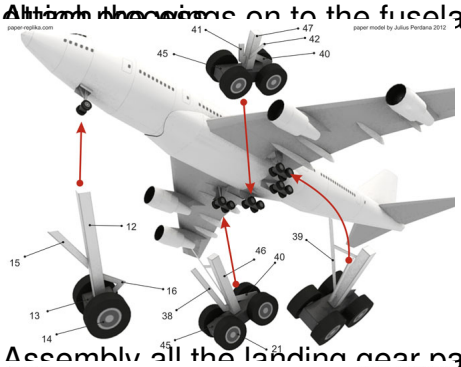

Assembly all the landing gear parts before attaching them below the aircraft model.

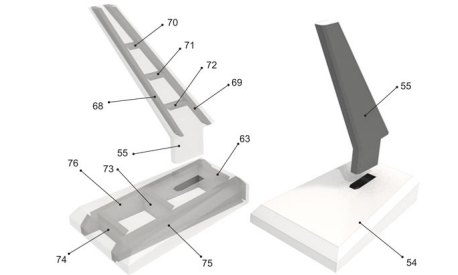

[illegible] agree on the radio button [illegible] show_ads.js > [illegible]